# BENE 5F IN

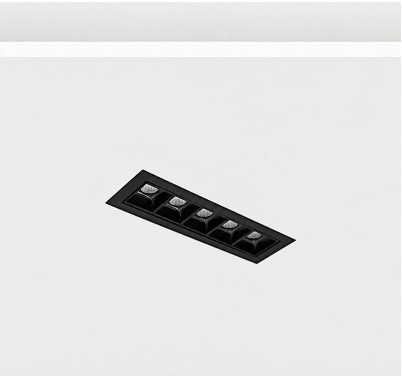

## Technical drawings

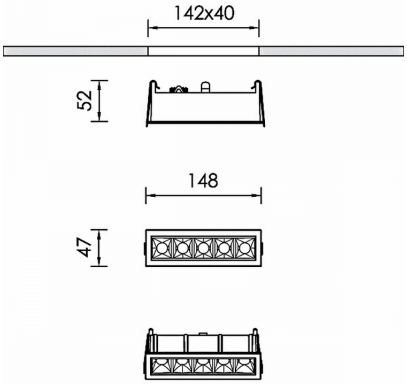


## Product Details

CE LM80 LM79 TM21 REACH Source Type Linear LED

### General Information

| | |
|---|---|
| Housing | Aluminium |
| Product code | DL0076CL003DAC |
| Product family | BENE |
| Diffuser | PMMA |
| Control Gear | Remote Electronic Driver |
| Options for Dimming Control | DALI2 |
| Options for Wireless Dimming | Casambi |
| Width | 47 mm |
| Length | 148 mm |
| Height | 52 mm |

### Electrical data

| | |
|---|---|
| Consumption | 5,2 W |
| Performance | 106.54 lm/W |
| Ripple | 3 |
| Power Factor | 0.96 |
| Nominal Voltage | 15 V |

### Luminaire Output

| | |
|---|---|
| Beam Type | M |
| Beam | 30º |
| Luminous Flux | 554 lm |
| CRI CCT | 940 |
| Glare Indicator Ugr Longwise Optics | 7 |
| Glare Indicator Ugr Parallel Optics | 6 |

### Light distribution

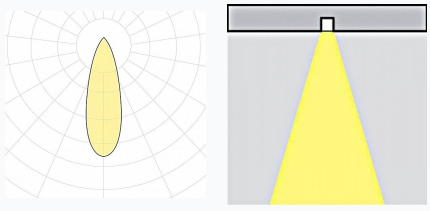

### Safety characteristics

| | |
|---|---|
| IK | 04 |
| IP | 20 |
| Protection Class | Class III |

### Temperature Operating Conditions

| | |
|---|---|
| Lifetime | >60.000h L80B10@35°C |
| Operating Ambient Temperature | -10...+45°C |
| Operating Humidity Level | 5...95% |