BENE 5F TRIMLESS ASYMMETRIC

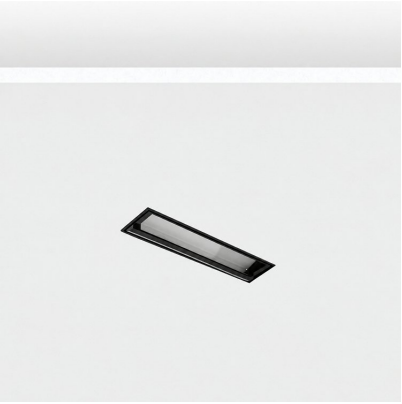

Technical drawings

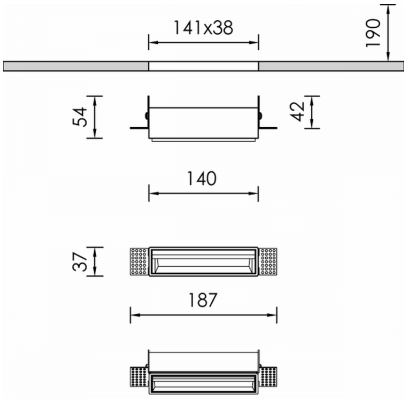

Product Details

CE LM80 LM79 TM21 REACH Source Type COB LED

General Information

Housing	Aluminium
Product code	DL0206CL003DA
Product family	BENE
Diffuser	PMMA
Control Gear	Remote Electronic Driver
Options for Dimming Control	DALI2
Width	37 mm
Length	140 mm
Height	54 mm

Electrical data

Consumption	8,8 W
Performance	39.66 lm/W
Ripple	3
Power Factor	0.96
Nominal Voltage	15 V

Luminaire Output

Beam Type	ASY
Beam	-
Luminous Flux	349 lm
CRI CCT	927

Light distribution

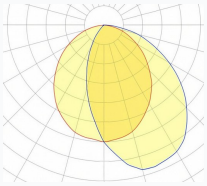

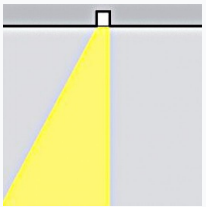

Safety characteristics

IK	04
IP	20
Protection Class	Class III

Temperature Operating Conditions

Lifetime	>60.000h L80B10@35°C
Operating Ambient Temperature	-10...+45°C
Operating Humidity Level	5...95%