SPOT BENE ROUND XL BLACK



Technical drawings

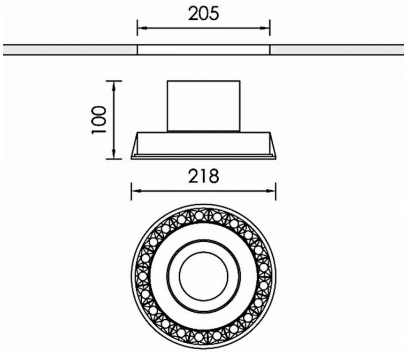

Product Details

CE LM80 LM79 TM21 REACH Source Type COB LED

General Information

Housing	Aluminium
Product code	DL0237CL002DA
Product family	BENE
Diffuser	PMMA
Control Gear	Remote Electronic Driver
Options for Dimming Control	DALI2
Height	100 mm
Diameter	218 mm

Electrical data

Consumption	38 W
Performance	86.84 lm/W
Ripple	3
Power Factor	0.96

Luminaire Output

Beam Type	W
Beam	48º
Luminous Flux	3300 lm
CRI CCT	935
Glare Indicator Ugr Longwise Optics	15
Glare Indicator Ugr Parallel Optics	15

Light distribution

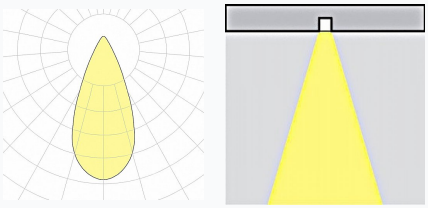

Safety characteristics

IK	04
IP	40

Temperature Operating Conditions

Operating Ambient Temperature	-10...+45°C
Operating Humidity Level	5...95%