SPOT BENE ROUND XL BLACK



Technical drawings

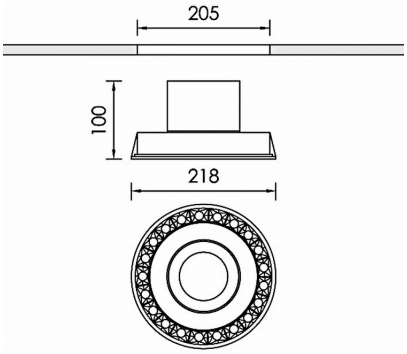

Product Details

CE LM80 LM79 TM21 REACH Source Type COB LED

General Information

Housing	Aluminium
Product code	DL0238CL002ON
Product family	BENE
Diffuser	PMMA
Control Gear	Remote Electronic Driver
Options for Dimming Control	On-Off
Height	100 mm
Diameter	218 mm

Electrical data

Consumption	38 W
Performance	92.11 lm/W
Ripple	3
Power Factor	0.96

Luminaire Output

Beam Type	W
Beam	48º
Luminous Flux	3500 lm
CRI CCT	940
Glare Indicator Ugr Longwise Optics	15
Glare Indicator Ugr Parallel Optics	15

Light distribution

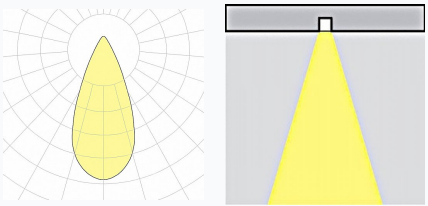

Safety characteristics

IK	04
IP	40

Temperature Operating Conditions

Operating Ambient Temperature	-10...+45°C
Operating Humidity Level	5...95%