VATES 14 LED



Technical drawings

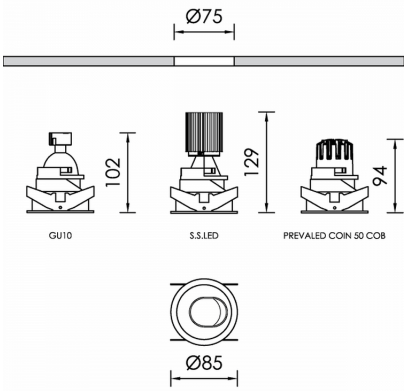

Product Details

CE LM80 LM79 TM21 REACH Source Type COB LED

General Information

Housing	Aluminium, Plastic
Product code	DL0390CL001ON
Product family	VATES
Diffuser	Reflector
Options for Dimming Control	On-Off
Height	129 mm
Diameter	85 mm

Electrical data

Consumption	10 W
Performance	59.4 lm/W
Ripple	3
Power Factor	0.96
Nominal Voltage	34.6 V

Luminaire Output

Beam Type	NM
Beam	24º
Luminous Flux	594 lm
CRI CCT	930

Light distribution

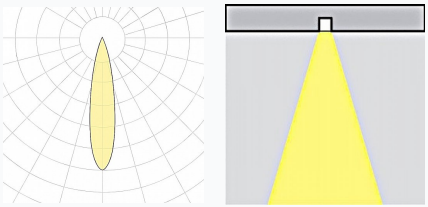

Safety characteristics

IK	04
IP	20
Protection Class	Class III

Temperature Operating Conditions

Lifetime	>60.000h L80B10@35°C
Operating Ambient Temperature	-10...+45°C
Operating Humidity Level	5...95%