STELLA 5 FUSUS



Technical drawings

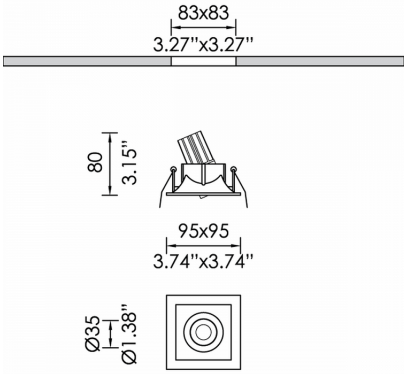

Product Details

CE LM80 LM79 TM21 REACH Source Type COB LED

General Information

Housing	Aluminium
Product code	DL0856CL002DA
Product family	STELLA
Control Gear	Remote Electronic Driver
Options for Dimming Control	DALI2
Width	95 mm
Length	95 mm
Height	80 mm

Electrical data

Consumption	6 W
Performance	95.33 lm/W
Ripple	3
Power Factor	0.96
Nominal Voltage	34.6 V

Luminaire Output

Beam Type	XW
Beam	60º
Luminous Flux	572 lm
CRI CCT	930

Light distribution



Safety characteristics

IK	06
IP	20
Protection Class	Class III

Temperature Operating Conditions

Lifetime	>60.000h L80B10@35°C
Operating Ambient Temperature	-10...+45°C
Operating Humidity Level	5...95%