HEADOFFICE: Showroom 13 Sofokli Venizelou Ave., Likovrisi, P.O. Box 14123, Athens, Greece Tel: (+30) 210 2851 304 I www.bright.gr I info@bright.gr

STELLA 6 LED



Technical drawings

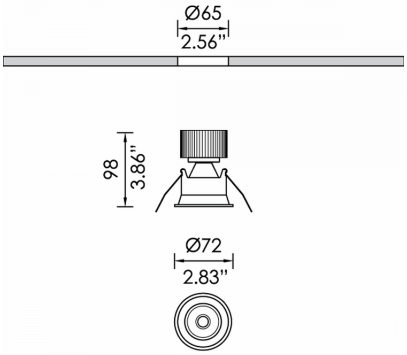

Product Details

CE LM80 LM79 TM21 REACH Source Type COB LED

General Information

Housing	Aluminium
Product code	DL0961CL001ON
Product family	STELLA
Control Gear	Remote Electronic Driver
Options for Dimming Control	On-Off
Height	98 mm
Diameter	72 mm

Electrical data

Consumption	8,3 W
Performance	98.43 lm/W
Ripple	3
Power Factor	0.96
Nominal Voltage	34.6 V

Luminaire Output

Beam Type	M
Beam	36º
Luminous Flux	817 lm
CRI CCT	930

Light distribution

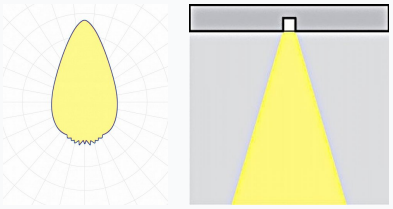

Safety characteristics

IK	05
IP	40
Protection Class	Class III

Temperature Operating Conditions

Lifetime	>60.000h L80B10@35°C
Operating Ambient Temperature	-10...+45°C
Operating Humidity Level	5...95%