STELLA 6 LED



Technical drawings

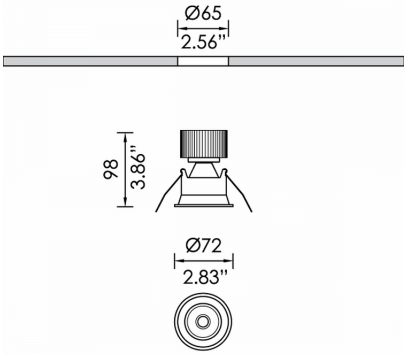

Product Details

CE LM80 LM79 TM21 REACH Source Type COB LED

General Information

Housing	Aluminium
Product code	DL0984CL001ON
Product family	STELLA
Control Gear	Remote Electronic Driver
Options for Dimming Control	On-Off
Height	98 mm
Diameter	72 mm

Electrical data

Consumption	10 W
Performance	100.2 lm/W
Ripple	3
Power Factor	0.96
Nominal Voltage	34.6 V

Luminaire Output

Beam Type	XW
Beam	60º
Luminous Flux	1002 lm
CRI CCT	940

Light distribution

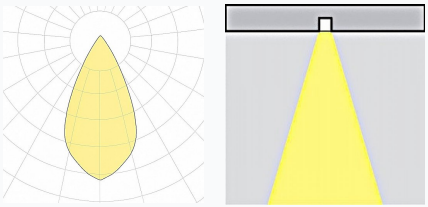

Safety characteristics

IK	05
IP	40
Protection Class	Class III

Temperature Operating Conditions

Lifetime	>60.000h L80B10@35°C
Operating Ambient Temperature	-10...+45°C
Operating Humidity Level	5...95%