CERNO 6 LED



Technical drawings

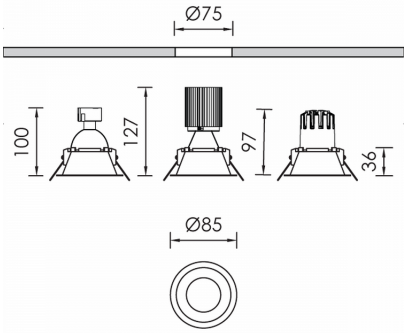

Product Details

CE LM80 LM79 TM21 REACH Source Type COB LED

General Information

Housing	Plastic
Product code	DL1390CL002ON
Product family	CERNO
Control Gear	Remote Electronic Driver
Options for Dimming Control	On-Off
Height	127 mm
Diameter	85 mm

Electrical data

Consumption	10,8 W
Performance	99.81 lm/W
Ripple	3
Power Factor	0.96
Nominal Voltage	34.6 V

Luminaire Output

Beam Type	XW
Beam	60º
Luminous Flux	1078 lm
CRI CCT	930
Glare Indicator Ugr Longwise Optics	20
Glare Indicator Ugr Parallel Optics	20

Light distribution

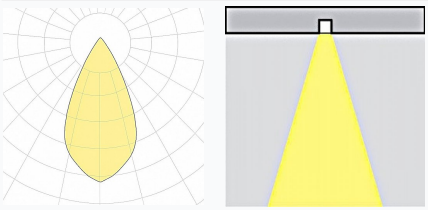

Safety characteristics

IK	05
IP	20
Protection Class	Class III

Temperature Operating Conditions

Lifetime	>60.000h L80B10@35°C
Operating Ambient Temperature	-10...+45°C
Operating Humidity Level	5...95%