CERNO 8 LED



Technical drawings

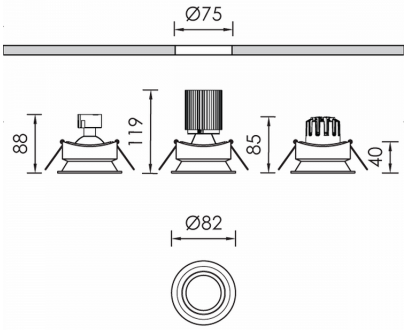

Product Details

CE LM80 LM79 TM21 REACH Source Type COB LED

General Information

Housing	Plastic
Product code	DL1421CL002ON
Product family	CERNO
Control Gear	Remote Electronic Driver
Options for Dimming Control	On-Off
Height	119 mm
Diameter	82 mm

Electrical data

Consumption	6 W
Performance	114 lm/W
Ripple	3
Power Factor	0.96
Nominal Voltage	34.6 V

Luminaire Output

Beam Type	NM
Beam	24º
Luminous Flux	684 lm
CRI CCT	940
Glare Indicator Ugr Longwise Optics	16
Glare Indicator Ugr Parallel Optics	16

Light distribution

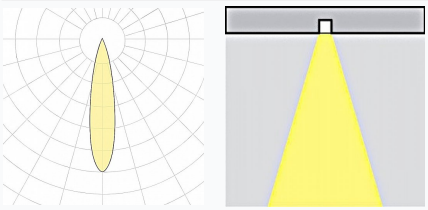

Safety characteristics

IK	05
IP	20
Protection Class	Class III

Temperature Operating Conditions

Lifetime	>60.000h L80B10@35°C
Operating Ambient Temperature	-10...+45°C
Operating Humidity Level	5...95%