HEADOFFICE: Showroom 13 Sofokli Venizelou Ave., Likovrisi, P.O. Box 14123, Athens, Greece Tel: (+30) 210 2851 304 I www.bright.gr I info@bright.gr

VERAX STELLA 20 LED



Technical drawings

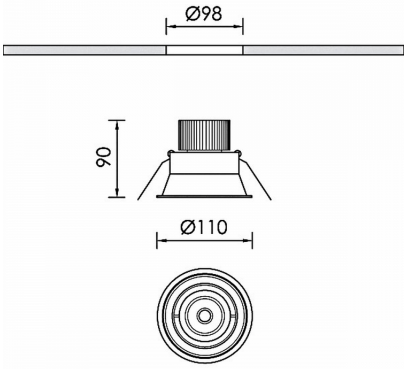

Product Details

CE LM80 LM79 TM21 REACH Source Type COB LED

General Information

Housing	Aluminium
Product code	DL1588CL002DA
Product family	VERAX STELLA
Control Gear	Remote Electronic Driver
Options for Dimming Control	DALI2
Height	90 mm
Diameter	110 mm

Electrical data

Consumption	6,7 W
Performance	107.91 lm/W
Ripple	3
Power Factor	0.96
Nominal Voltage	34.6 V

Luminaire Output

Beam Type	XW
Beam	60º
Luminous Flux	723 lm
CRI CCT	930
Glare Indicator Ugr Longwise Optics	19
Glare Indicator Ugr Parallel Optics	19

Light distribution

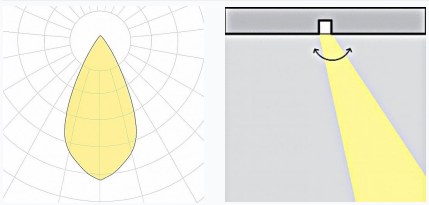

Safety characteristics

IK	05
IP	20
Protection Class	Class III

Temperature Operating Conditions

Lifetime	>60.000h L80B10@35°C
Operating Ambient Temperature	-10...+45°C
Operating Humidity Level	5...95%