MAX ARTUS H.P.LED



Technical drawings

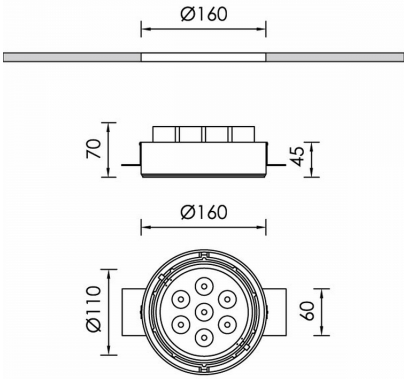

Product Details

CE LM80 LM79 TM21 REACH Source Type H.P. LED

General Information

Housing	Aluminium
Product code	DL1766CL002DA
Product family	ARTUS
Control Gear	Remote Electronic Driver
Options for Dimming Control	DALI2
Height	70 mm
Diameter	160 mm

Electrical data

Consumption	11,7 W
Performance	98.29 lm/W
Ripple	3
Power Factor	0.96
Nominal Voltage	21 V

Luminaire Output

Beam Type	W
Beam	45º
Luminous Flux	1150 lm
CRI CCT	940
Glare Indicator Ugr Longwise Optics	16
Glare Indicator Ugr Parallel Optics	16

Light distribution

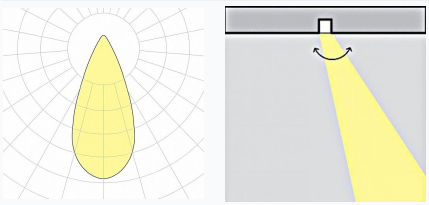

Safety characteristics

IK	05
IP	20
Protection Class	Class III

Temperature Operating Conditions

Lifetime	>60.000h L80B10@35°C
Operating Ambient Temperature	-10...+45°C
Operating Humidity Level	5...95%