MAX ARTUS LED



Technical drawings

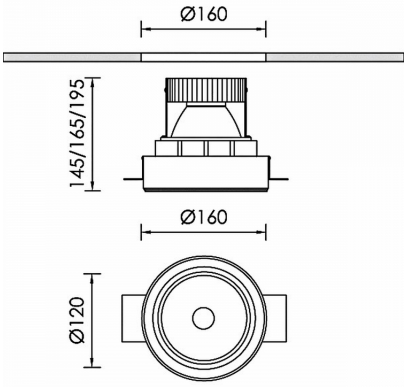

Product Details

CE LM80 LM79 TM21 REACH Source Type COB LED

General Information

Housing	Aluminium
Product code	DL1815CL003DAC
Product family	ARTUS
Diffuser	Clear Polycarbonate
Control Gear	Remote Electronic Driver
Options for Dimming Control	DALI2
Options for Wireless Dimming	Casambi
Height	195 mm
Diameter	160 mm

Electrical data

Consumption	31,1 W
Performance	104.02 lm/W
Ripple	3
Power Factor	0.96
Nominal Voltage	34.6 V

Luminaire Output

Beam Type	W
Beam	40º
Luminous Flux	3235 lm
CRI CCT	940
Glare Indicator Ugr Longwise Optics	23
Glare Indicator Ugr Parallel Optics	23

Light distribution

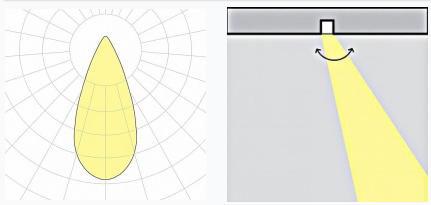

Safety characteristics

IK	05
IP	20
Protection Class	Class III

Temperature Operating Conditions

Lifetime	>60.000h L80B10@35°C
Operating Ambient Temperature	-10...+45°C
Operating Humidity Level	5...95%