MAX ARTUS SQUARE LED



Technical drawings

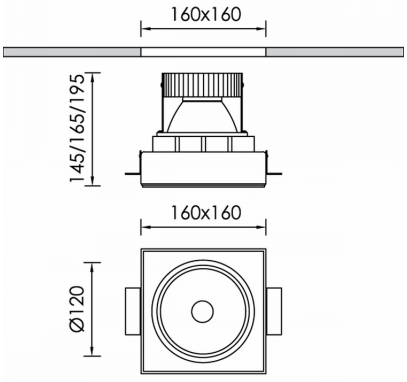

Product Details

CE LM80 LM79 TM21 REACH Source Type COB LED

General Information

Housing	Aluminium
Product code	DL1852CL001DA
Product family	ARTUS
Control Gear	Remote Electronic Driver
Options for Dimming Control	DALI2
Width	160 mm
Length	160 mm
Height	195 mm

Electrical data

Consumption	34,2 W
Performance	113.19 lm/W
Ripple	3
Power Factor	0.96
Nominal Voltage	34.6 V

Luminaire Output

Beam Type	N
Beam	18º
Luminous Flux	3871 lm
CRI CCT	940

Light distribution



Safety characteristics

IK	05
IP	20
Protection Class	Class III

Temperature Operating Conditions

Lifetime	>60.000h L80B10@35°C
Operating Ambient Temperature	-10...+45°C
Operating Humidity Level	5...95%