HEADOFFICE: Showroom 13 Sofokli Venizelou Ave., Likovrisi, P.O. Box 14123, Athens, Greece Tel: (+30) 210 2851 304 I www.bright.gr I info@bright.gr

MAX MOBILIS 2 LED



Technical drawings

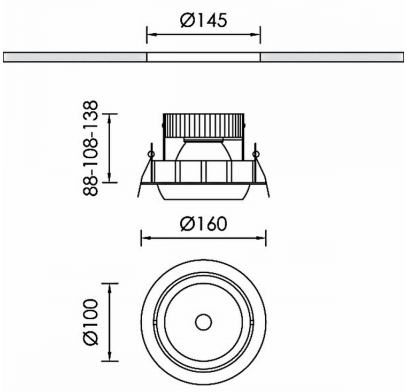

Product Details

CE LM80 LM79 TM21 REACH Source Type COB LED

General Information

Housing	Aluminium
Product code	DL2096CL001DA
Product family	MAX MOBILIS
Diffuser	Clear Polycarbonate
Control Gear	Remote Electronic Driver
Options for Dimming Control	DALI2
Height	138 mm
Diameter	160 mm

Electrical data

Consumption	31,1 W
Performance	97.81 lm/W
Ripple	3
Power Factor	0.96
Nominal Voltage	34.6 V

Luminaire Output

Beam Type	M
Beam	36º
Luminous Flux	3042 lm
CRI CCT	930
Glare Indicator Ugr Longwise Optics	20
Glare Indicator Ugr Parallel Optics	20

Light distribution

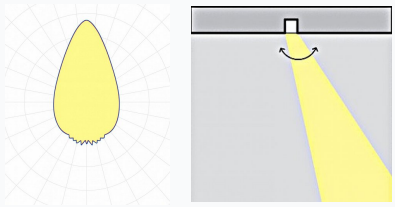

Safety characteristics

IK	07
IP	20
Protection Class	Class III

Temperature Operating Conditions

Lifetime	>60.000h L80B10@35°C
Operating Ambient Temperature	-10...+45°C
Operating Humidity Level	5...95%