HEADOFFICE: Showroom 13 Sofokli Venizelou Ave., Likovrisi, P.O. Box 14123, Athens, Greece Tel: (+30) 210 2851 304 I www.bright.gr I info@bright.gr

MAX MOBILIS LED

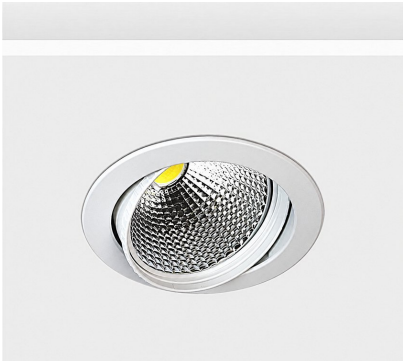

Technical drawings

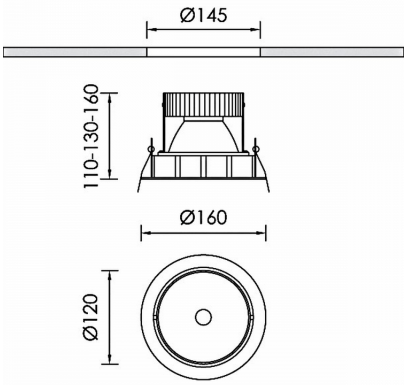

Product Details

CE LM80 LM79 TM21 REACH Source Type COB LED

General Information

Housing	Aluminium
Product code	DL2202CL006DA
Product family	MAX MOBILIS
Control Gear	Remote Electronic Driver
Options for Dimming Control	DALI2
Height	160 mm
Diameter	160 mm

Electrical data

Consumption	12,8 W
Performance	112.58 lm/W
Ripple	3
Power Factor	0.96
Nominal Voltage	34.6 V

Luminaire Output

Beam Type	NM
Beam	24º
Luminous Flux	1441 lm
CRI CCT	930
Glare Indicator Ugr Longwise Optics	14
Glare Indicator Ugr Parallel Optics	14

Light distribution

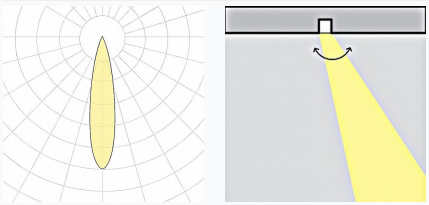

Safety characteristics

IK	05
IP	20
Protection Class	Class III

Temperature Operating Conditions

Lifetime	>60.000h L80B10@35°C
Operating Ambient Temperature	-10...+45°C
Operating Humidity Level	5...95%