MAX MOBILIS LED

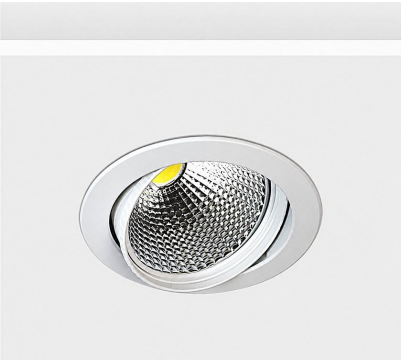

Technical drawings

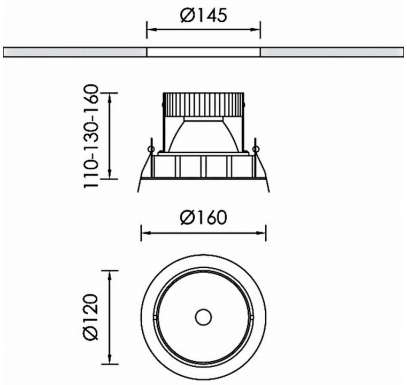

Product Details

CE LM80 LM79 TM21 REACH Source Type COB LED

General Information

Housing	Aluminium
Product code	DL2243CL006DA
Product family	MAX MOBILIS
Options for Dimming Control	DALI2
Height	160 mm
Diameter	160 mm

Electrical data

Consumption	46,6 W
Performance	106.72 lm/W
Ripple	3
Power Factor	0.96
Nominal Voltage	34.6 V

Luminaire Output

Beam Type	XW
Beam	60º
Luminous Flux	4973 lm
CRI CCT	940
Glare Indicator Ugr Longwise Optics	22
Glare Indicator Ugr Parallel Optics	22

Light distribution



Safety characteristics

IK	05
IP	20
Protection Class	Class III

Temperature Operating Conditions

Lifetime	>60.000h L80B10@35°C
Operating Ambient Temperature	-10...+45°C
Operating Humidity Level	5...95%