MAX CARBO LED



Technical drawings

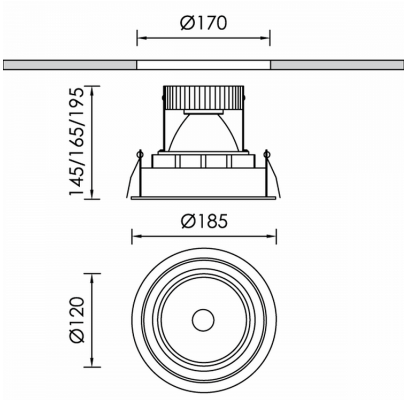

Product Details

CE LM80 LM79 TM21 REACH Source Type COB LED

General Information

Housing	Aluminium
Product code	DL2311CL001ON
Product family	MAX CARBO
Control Gear	Remote Electronic Driver
Options for Dimming Control	On-Off
Height	195 mm
Diameter	185 mm

Electrical data

Consumption	26,9 W
Performance	107.1 lm/W
Ripple	3
Power Factor	0.96
Nominal Voltage	34.6 V

Luminaire Output

Beam Type	N
Beam	15º
Luminous Flux	2881 lm
CRI CCT	940
Glare Indicator Ugr Longwise Optics	17
Glare Indicator Ugr Parallel Optics	17

Light distribution

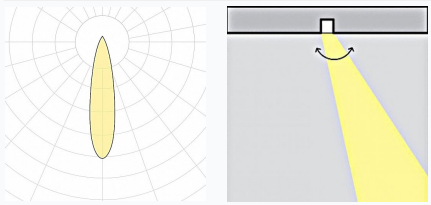

Safety characteristics

IK	05
IP	20
Protection Class	Class III

Temperature Operating Conditions

Lifetime	>60.000h L80B10@35°C
Operating Ambient Temperature	-10...+45°C
Operating Humidity Level	5...95%