HEADOFFICE: Showroom 13 Sofokli Venizelou Ave., Likovrisi, P.O. Box 14123, Athens, Greece Tel: (+30) 210 2851 304 I www.bright.gr I info@bright.gr

# FUSUS M TRIM LED



## Technical drawings

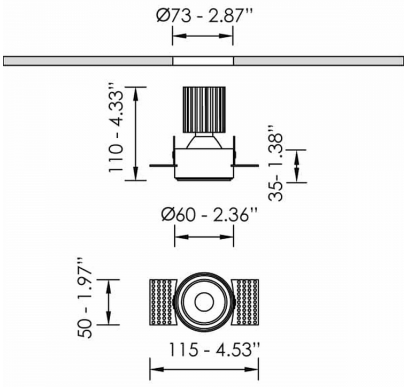


## Product Details

CE LM80 LM79 TM21 REACH Source Type COB LED

### General Information

| | |
|---|---|
| Housing | Aluminium |
| Product code | DL2603CL004DA |
| Product family | FUSUS |
| Control Gear | Remote Electronic Driver |
| Options for Dimming Control | DALI2 |
| Height | 110 mm |
| Diameter | 60 mm |

### Electrical data

| | |
|---|---|
| Consumption | 10,8 W |
| Performance | 105.28 lm/W |
| Ripple | 3 |
| Power Factor | 0.96 |
| Nominal Voltage | 34.6 V |

### Luminaire Output

| | |
|---|---|
| Beam Type | N |
| Beam | 18º |
| Luminous Flux | 1137 lm |
| CRI CCT | 940 |
| Glare Indicator Ugr Longwise Optics | 19 |
| Glare Indicator Ugr Parallel Optics | 19 |

### Light distribution

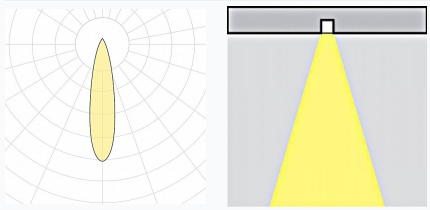

### Safety characteristics

| | |
|---|---|
| IK | 05 |
| IP | 20 |
| Protection Class | Class III |

### Temperature Operating Conditions

| | |
|---|---|
| Lifetime | >60.000h L80B10@35°C |
| Operating Ambient Temperature | -10...+45°C |
| Operating Humidity Level | 5...95% |