FIXUS M LED IP54



Technical drawings

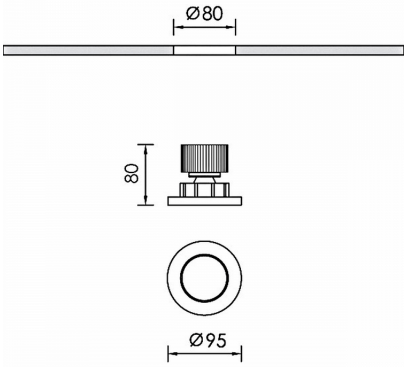

Product Details

CE LM80 LM79 TM21 REACH Source Type COB LED

General Information

Housing	Aluminium
Product code	DL2703CL002ON
Product family	FIXUS
Diffuser	Safety Glass Clear
Control Gear	Remote Electronic Driver
Options for Dimming Control	On-Off
Height	80 mm
Diameter	95 mm

Electrical data

Consumption	9,2 W
Performance	102.07 lm/W
Ripple	3
Power Factor	0.96
Nominal Voltage	34.6 V

Luminaire Output

Beam Type	M
Beam	36º
Luminous Flux	939 lm
CRI CCT	930
Glare Indicator Ugr Longwise Optics	21
Glare Indicator Ugr Parallel Optics	21

Light distribution

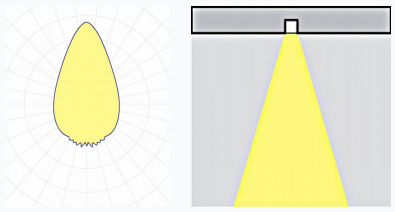

Safety characteristics

IK	05
IP	54
Protection Class	Class III

Temperature Operating Conditions

Lifetime	>60.000h L80B10@35°C
Operating Ambient Temperature	-10...+45°C
Operating Humidity Level	5...95%