FIXUS LED



Technical drawings

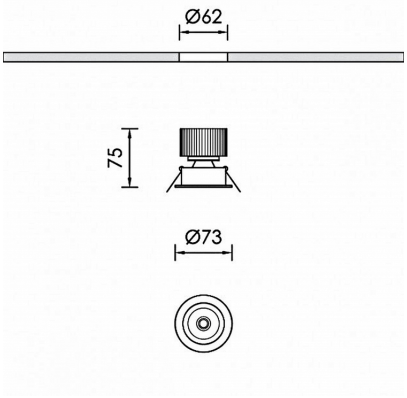

Product Details

CE LM80 LM79 TM21 REACH Source Type COB LED

General Information

Housing	Aluminium
Product code	DL2773CL004ON
Product family	FIXUS
Diffuser	Safety Glass Clear
Control Gear	Remote Electronic Driver
Options for Dimming Control	On-Off
Height	75 mm
Diameter	73 mm

Electrical data

Consumption	9,2 W
Performance	126.52 lm/W
Ripple	3
Power Factor	0.96
Nominal Voltage	34.6 V

Luminaire Output

Beam Type	ASY
Beam	-
Luminous Flux	1164 lm
CRI CCT	930
Glare Indicator Ugr Longwise Optics	27
Glare Indicator Ugr Parallel Optics	27

Light distribution

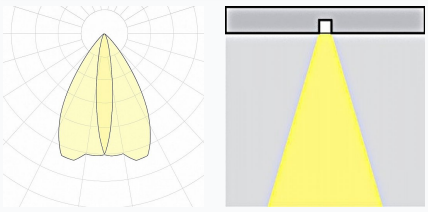

Safety characteristics

IK	05
IP	20
Protection Class	Class III

Temperature Operating Conditions

Lifetime	>60.000h L80B10@35°C
Operating Ambient Temperature	-10...+45°C
Operating Humidity Level	5...95%