MINI FIXUS H.P.LED



Technical drawings

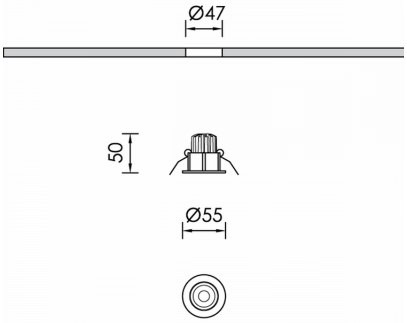

Product Details

CE LM80 LM79 TM21 REACH Source Type H.P. LED

General Information

Housing	Aluminium
Product code	DL2810CL001DAC
Product family	FIXUS
Control Gear	Remote Electronic Driver
Options for Dimming Control	DALI2
Options for Wireless Dimming	Casambi
Height	50 mm
Diameter	55 mm

Electrical data

Consumption	1,1 W
Performance	119.09 lm/W
Ripple	3
Power Factor	0.96
Nominal Voltage	3 V

Luminaire Output

Beam Type	W
Beam	45º
Luminous Flux	131 lm
CRI CCT	940

Light distribution

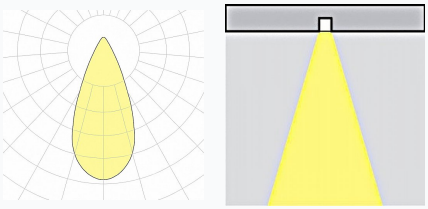

Safety characteristics

IK	05
IP	20
Protection Class	Class III

Temperature Operating Conditions

Lifetime	>60.000h L80B10@35°C
Operating Ambient Temperature	-10...+45°C
Operating Humidity Level	5...95%