# NOVUS IN BOX 2x H.P.LED



## Technical drawings

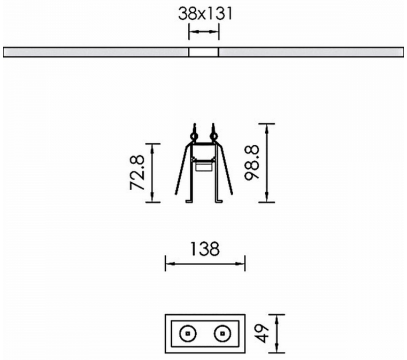


## Product Details

CE LM80 LM79 TM21 REACH Source Type H.P. LED

### General Information

| | |
|---|---|
| Housing | Aluminium |
| Product code | DL2900CL002DAC |
| Product family | NOVUS |
| Control Gear | Remote Electronic Driver |
| Options for Dimming Control | DALI2 |
| Options for Wireless Dimming | Casambi |
| Width | 49 mm |
| Length | 138 mm |
| Height | 98.8 mm |

### Electrical data

| | |
|---|---|
| Consumption | 2,2 W |
| Performance | 97.27 lm/W |
| Ripple | 3 |
| Power Factor | 0.96 |
| Nominal Voltage | 6 V |

### Luminaire Output

| | |
|---|---|
| Beam Type | NM |
| Beam | 25º |
| Luminous Flux | 214 lm |
| CRI CCT | 927 |
| Glare Indicator Ugr Longwise Optics | 15 |
| Glare Indicator Ugr Parallel Optics | 15 |

### Light distribution

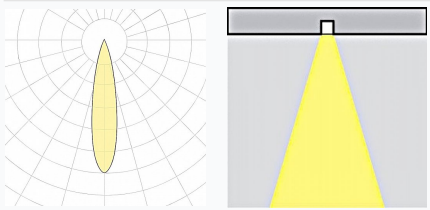

### Safety characteristics

| | |
|---|---|
| IK | 04 |
| IP | 20 |
| Protection Class | Class III |

### Temperature Operating Conditions

| | |
|---|---|
| Lifetime | >60.000h L80B10@35°C |
| Operating Ambient Temperature | -10...+45°C |
| Operating Humidity Level | 5...95% |