NOVUS IN BOX 5x H.P.LED



Technical drawings

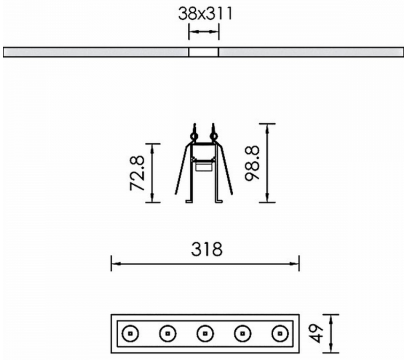

Product Details

CE LM80 LM79 TM21 REACH Source Type H.P. LED

General Information

Housing	Aluminium
Product code	DL2951CL003DAC
Product family	NOVUS
Control Gear	Remote Electronic Driver
Options for Dimming Control	DALI2
Options for Wireless Dimming	Casambi
Width	49 mm
Length	318 mm
Height	98.8 mm

Electrical data

Consumption	8,5 W
Performance	89.88 lm/W
Ripple	3
Power Factor	0.96
Nominal Voltage	15 V

Luminaire Output

Beam Type	NM
Beam	25º
Luminous Flux	764 lm
CRI CCT	930
Glare Indicator Ugr Longwise Optics	14
Glare Indicator Ugr Parallel Optics	13

Light distribution

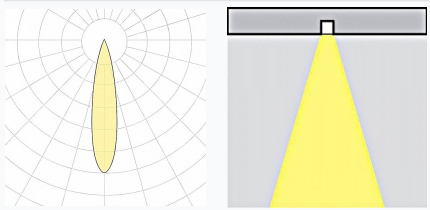

Safety characteristics

IK	04
IP	20
Protection Class	Class III

Temperature Operating Conditions

Lifetime	>60.000h L80B10@35°C
Operating Ambient Temperature	-10...+45°C
Operating Humidity Level	5...95%