HEADOFFICE: Showroom 13 Sofokli Venizelou Ave., Likovrisi, P.O. Box 14123, Athens, Greece Tel: (+30) 210 2851 304 I www.bright.gr I info@bright.gr

NOVUS IN BOX 7x H.P.LED



Technical drawings

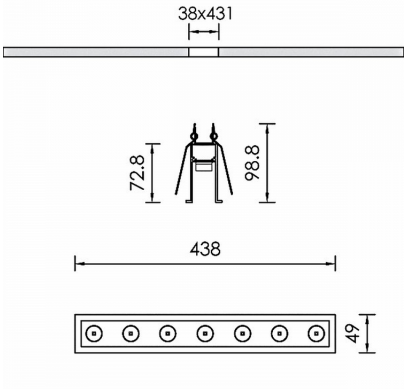

Product Details

CE LM80 LM79 TM21 REACH Source Type H.P. LED

General Information

Housing	Aluminium
Product code	DL2964CL003DAC
Product family	NOVUS
Control Gear	Remote Electronic Driver
Options for Dimming Control	DALI2
Options for Wireless Dimming	Casambi
Width	49 mm
Length	438 mm
Height	98.8 mm

Electrical data

Consumption	7,7 W
Performance	111.04 lm/W
Ripple	3
Power Factor	0.96
Nominal Voltage	21 V

Luminaire Output

Beam Type	UN
Beam	8º
Luminous Flux	855 lm
CRI CCT	940
Glare Indicator Ugr Longwise Optics	7
Glare Indicator Ugr Parallel Optics	7

Light distribution

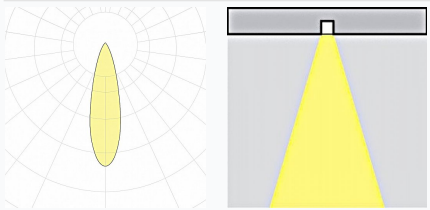

Safety characteristics

IK	04
IP	20
Protection Class	Class III

Temperature Operating Conditions

Lifetime	>60.000h L80B10@35°C
Operating Ambient Temperature	-10...+45°C
Operating Humidity Level	5...95%