STATUS 2F LED



Technical drawings

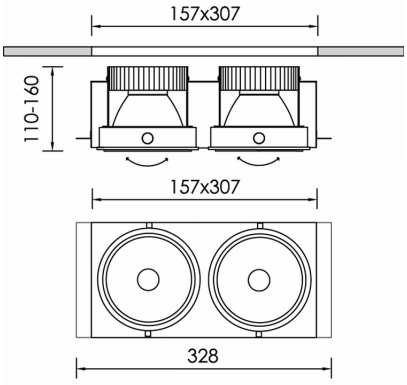

Product Details

CE LM80 LM79 TM21 REACH Source Type COB LED

General Information

Housing	Μέταλλο, Αλουμίνιο
Product code	DL3101CL002DA
Product family	STATUS
Diffuser	Clear Polycarbonate
Control Gear	Remote Electronic Driver
Options for Dimming Control	DALI2
Width	157 mm
Length	307 mm
Height	160 mm

Electrical data

Consumption	25,7 W
Performance	119.18 lm/W
Ripple	3
Power Factor	0.96
Nominal Voltage	2x34,6 V

Luminaire Output

Beam Type	XW
Beam	60º
Luminous Flux	3063 lm
CRI CCT	940
Glare Indicator Ugr Longwise Optics	13
Glare Indicator Ugr Parallel Optics	12

Light distribution

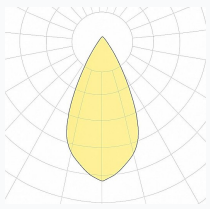

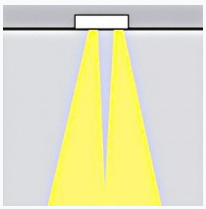

Safety characteristics

IK	07
IP	20
Protection Class	Class III

Temperature Operating Conditions

Lifetime	>60.000h L80B10@35°C
Operating Ambient Temperature	-10...+45°C
Operating Humidity Level	5...95%