# STATUS 3F LED



## Technical drawings

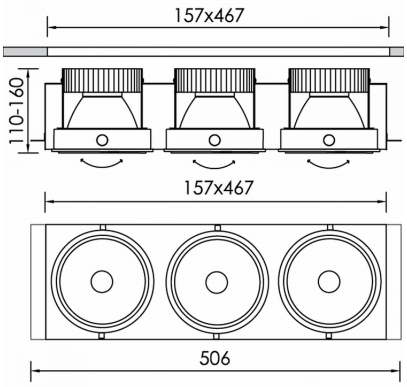


## Product Details

CE LM80 LM79 TM21 REACH Source Type COB LED

### General Information

| | |
|---|---|
| Housing | Μέταλλο, Αλουμίνιο |
| Product code | DL3155CL001DA |
| Product family | STATUS |
| Control Gear | Remote Electronic Driver |
| Options for Dimming Control | DALI2 |
| Width | 157 mm |
| Length | 506 mm |
| Height | 160 mm |

### Electrical data

| | |
|---|---|
| Consumption | 56,3 W |
| Performance | 113.55 lm/W |
| Ripple | 3 |
| Power Factor | 0.96 |
| Nominal Voltage | 3x34,6 V |

### Luminaire Output

| | |
|---|---|
| Beam Type | NM |
| Beam | 24º |
| Luminous Flux | 6393 lm |
| CRI CCT | 940 |
| Glare Indicator Ugr Longwise Optics | 12 |
| Glare Indicator Ugr Parallel Optics | 12 |

### Light distribution

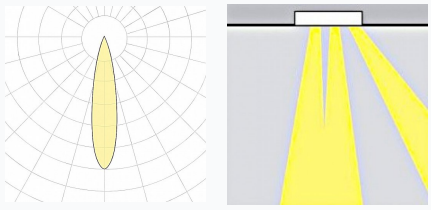

### Safety characteristics

| | |
|---|---|
| IK | 07 |
| IP | 20 |
| Protection Class | Class III |

### Temperature Operating Conditions

| | |
|---|---|
| Lifetime | >60.000h L80B10@35°C |
| Operating Ambient Temperature | -10...+45°C |
| Operating Humidity Level | 5...95% |