TALUS M 2F LED



Technical drawings

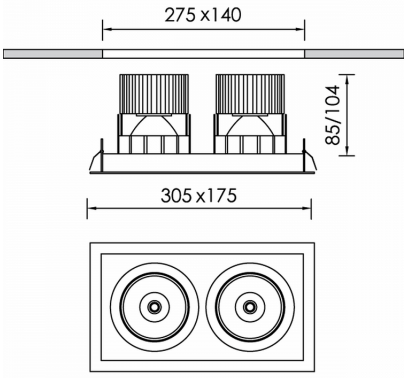

Product Details

CE LM80 LM79 TM21 REACH Source Type COB LED

General Information

Housing	Metal
Product code	DL4062CL002DA
Product family	TALUS
Diffuser	Clear Polycarbonate
Control Gear	Remote Electronic Driver
Options for Dimming Control	DALI2
Width	175 mm
Length	305 mm
Height	104 mm

Electrical data

Consumption	53,6 W
Performance	101.12 lm/W
Ripple	3
Power Factor	0.96
Nominal Voltage	2x34,6 V

Luminaire Output

Beam Type	NM
Beam	24º
Luminous Flux	5420 lm
CRI CCT	930
Glare Indicator Ugr Longwise Optics	15
Glare Indicator Ugr Parallel Optics	15

Light distribution

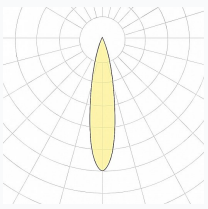

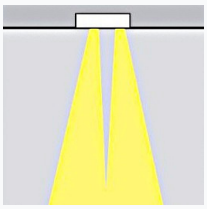

Safety characteristics

IK	05
IP	20
Protection Class	Class III

Temperature Operating Conditions

Lifetime	>60.000h L80B10@35°C
Operating Ambient Temperature	-10...+45°C
Operating Humidity Level	5...95%