MINOR 3F LED



Technical drawings

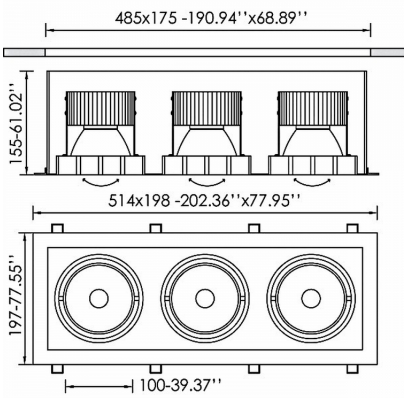

Product Details

CE LM80 LM79 TM21 REACH Source Type COB LED

General Information

Housing	Metal
Product code	DL4268CL002ON
Product family	MINOR
Diffuser	Clear Polycarbonate
Control Gear	Remote Electronic Driver
Options for Dimming Control	On-Off
Width	198 mm
Length	514 mm
Height	155 mm

Electrical data

Consumption	121,2 W
Performance	110.99 lm/W
Ripple	3
Power Factor	0.96
Nominal Voltage	3x34.6 V

Luminaire Output

Beam Type	M
Beam	36º
Luminous Flux	13452 lm
CRI CCT	940
Glare Indicator Ugr Longwise Optics	19
Glare Indicator Ugr Parallel Optics	19

Light distribution

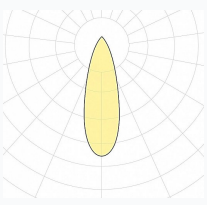

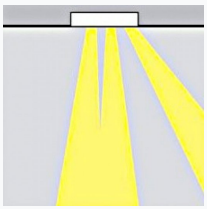

Safety characteristics

IK	07
IP	20
Protection Class	Class III

Temperature Operating Conditions

Lifetime	>60.000h L80B10@35°C
Operating Ambient Temperature	-10...+45°C
Operating Humidity Level	5...95%