MINOR 3F LED



Technical drawings

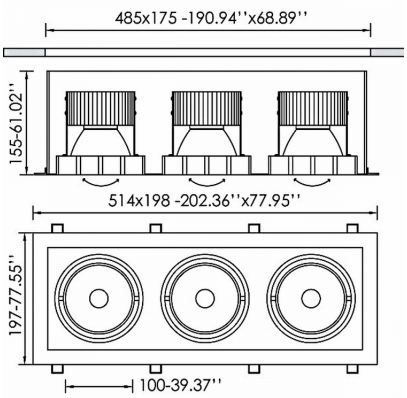

Product Details

CE LM80 LM79 TM21 REACH Source Type COB LED

General Information

Housing	Metal
Product code	DL4272CL002ON
Product family	MINOR
Diffuser	Clear Polycarbonate
Control Gear	Remote Electronic Driver
Options for Dimming Control	On-Off
Width	198 mm
Length	514 mm
Height	155 mm

Electrical data

Consumption	80,4 W
Performance	102.3 lm/W
Ripple	3
Power Factor	0.96
Nominal Voltage	3x34.6 V

Luminaire Output

Beam Type	XW
Beam	60º
Luminous Flux	8225 lm
CRI CCT	930
Glare Indicator Ugr Longwise Optics	18
Glare Indicator Ugr Parallel Optics	17

Light distribution

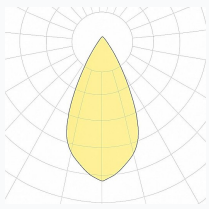

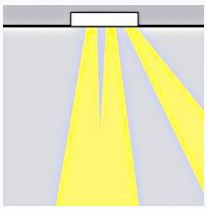

Safety characteristics

IK	07
IP	20
Protection Class	Class III

Temperature Operating Conditions

Lifetime	>60.000h L80B10@35°C
Operating Ambient Temperature	-10...+45°C
Operating Humidity Level	5...95%