TALUS 1F LED



Technical drawings

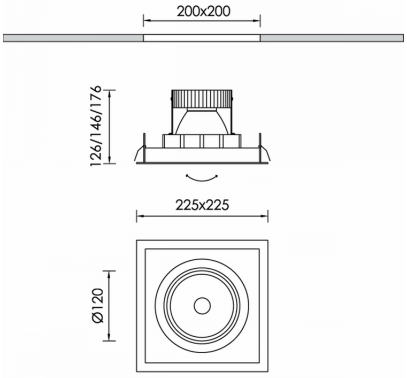

Product Details

CE LM80 LM79 TM21 REACH Source Type COB LED

General Information

Housing	Metal
Product code	DL4293CL002DAC
Product family	TALUS
Diffuser	Clear Polycarbonate
Control Gear	Remote Electronic Driver
Options for Dimming Control	DALI2
Options for Wireless Dimming	Casambi
Width	225 mm
Length	225 mm
Height	176 mm

Electrical data

Consumption	18,7 W
Performance	113.96 lm/W
Ripple	3
Power Factor	0.96
Nominal Voltage	34.6 V

Luminaire Output

Beam Type	N
Beam	15º
Luminous Flux	2131 lm
CRI CCT	940

Light distribution

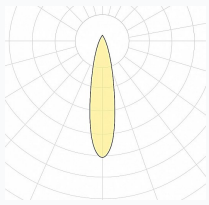

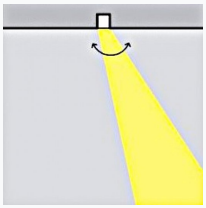

Safety characteristics

IK	07
IP	20
Protection Class	Class III

Temperature Operating Conditions

Lifetime	>60.000h L80B10@35°C
Operating Ambient Temperature	-10...+45°C
Operating Humidity Level	5...95%