# TALUS 2F LED



## Technical drawings

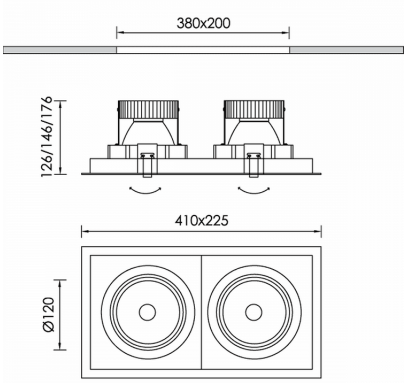


## Product Details

CE LM80 LM79 TM21 REACH Source Type COB LED

### General Information

| | |
|---|---|
| Housing | Metal |
| Product code | DL4394CL002ON |
| Product family | TALUS |
| Diffuser | Clear Polycarbonate |
| Control Gear | Remote Electronic Driver |
| Options for Dimming Control | On-Off |
| Width | 225 mm |
| Length | 410 mm |
| Height | 176 mm |

### Electrical data

| | |
|---|---|
| Consumption | 68,4 W |
| Performance | 114.52 lm/W |
| Ripple | 3 |
| Power Factor | 0.96 |
| Nominal Voltage | 2x34.6 V |

### Luminaire Output

| | |
|---|---|
| Beam Type | XW |
| Beam | 60º |
| Luminous Flux | 7833 lm |
| CRI CCT | 940 |
| Glare Indicator Ugr Longwise Optics | 17 |
| Glare Indicator Ugr Parallel Optics | 16 |

### Light distribution

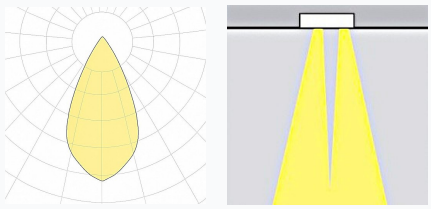

### Safety characteristics

| | |
|---|---|
| IK | 07 |
| IP | 20 |
| Protection Class | Class III |

### Temperature Operating Conditions

| | |
|---|---|
| Lifetime | >60.000h L80B10@35°C |
| Operating Ambient Temperature | -10...+45°C |
| Operating Humidity Level | 5...95% |