TALUS 2F LED



Technical drawings

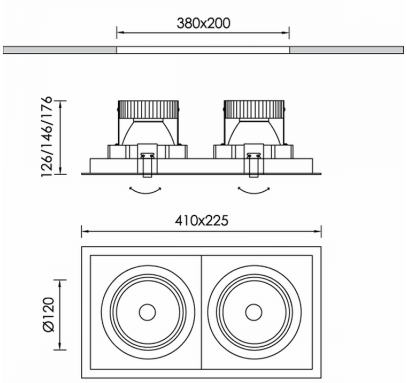

Product Details

CE LM80 LM79 TM21 REACH Source Type COB LED

General Information

Housing	Metal
Product code	DL4396CL002ON
Product family	TALUS
Diffuser	Clear Polycarbonate
Control Gear	Remote Electronic Driver
Options for Dimming Control	On-Off
Width	225 mm
Length	410 mm
Height	176 mm

Electrical data

Consumption	93,3 W
Performance	107.85 lm/W
Ripple	3
Power Factor	0.96
Nominal Voltage	2x34.6 V

Luminaire Output

Beam Type	XW
Beam	60º
Luminous Flux	10062 lm
CRI CCT	940
Glare Indicator Ugr Longwise Optics	18
Glare Indicator Ugr Parallel Optics	17

Light distribution

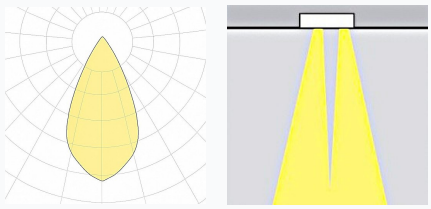

Safety characteristics

IK	07
IP	20
Protection Class	Class III

Temperature Operating Conditions

Lifetime	>60.000h L80B10@35°C
Operating Ambient Temperature	-10...+45°C
Operating Humidity Level	5...95%