MINOR 3F H.P.LED



Technical drawings

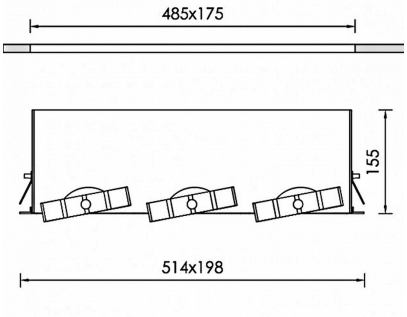

Product Details

CE LM80 LM79 TM21 REACH Source Type H.P. LED

General Information

Housing	Metal
Product code	DL4602CL002DA
Product family	MINOR
Diffuser	PMMA
Control Gear	Remote Electronic Driver
Options for Dimming Control	DALI2
Width	198 mm
Length	514 mm
Height	155 mm

Electrical data

Consumption	83,3 W
Performance	73.61 lm/W
Ripple	3
Power Factor	0.96
Nominal Voltage	3x54 V

Luminaire Output

Beam Type	NM
Beam	25º
Luminous Flux	6132 lm
CRI CCT	930

Light distribution

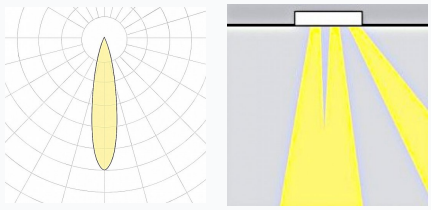

Safety characteristics

IK	07
IP	20
Protection Class	Class III

Temperature Operating Conditions

Lifetime	>60.000h L80B10@35°C
Operating Ambient Temperature	-10...+45°C
Operating Humidity Level	5...95%