MINOR S 2F LED



Technical drawings

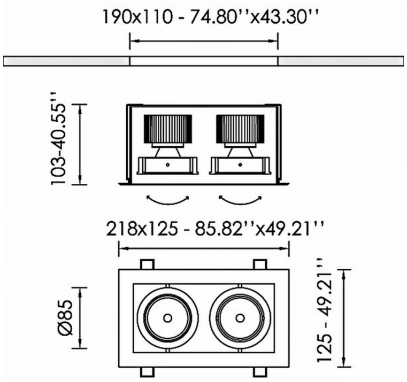

Product Details

CE LM80 LM79 TM21 REACH Source Type COB LED

General Information

Housing	Metal
Product code	DL4678CL002DA
Product family	MINOR
Diffuser	Safety Glass Clear
Control Gear	Remote Electronic Driver
Options for Dimming Control	DALI2
Width	125 mm
Length	218 mm
Height	103 mm

Electrical data

Consumption	21,6 W
Performance	105.28 lm/W
Ripple	3
Power Factor	0.96
Nominal Voltage	2x34.6 V

Luminaire Output

Beam Type	ASY
Beam	-
Luminous Flux	2274 lm
CRI CCT	940
Glare Indicator Ugr Longwise Optics	17
Glare Indicator Ugr Parallel Optics	23

Light distribution

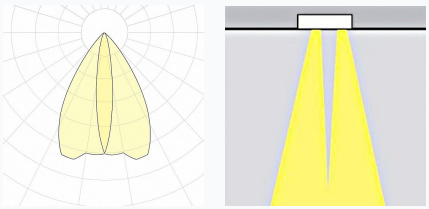

Safety characteristics

IK	05
IP	20
Protection Class	Class III

Temperature Operating Conditions

Lifetime	>60.000h L80B10@35°C
Operating Ambient Temperature	-10...+45°C
Operating Humidity Level	5...95%