HEADOFFICE: Showroom 13 Sofokli Venizelou Ave., Likovrisi, P.O. Box 14123, Athens, Greece Tel: (+30) 210 2851 304 I www.bright.gr I info@bright.gr

PENDO 8R LED



Technical drawings

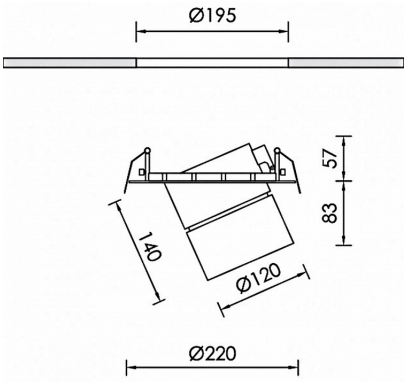

Product Details

CE LM80 LM79 TM21 REACH Source Type COB LED

General Information

Housing	Aluminium
Product code	DL4782CL002ON
Product family	PENDO
Diffuser	Clear Polycarbonate
Control Gear	Remote Electronic Driver
Options for Dimming Control	On-Off
Height	140 mm
Diameter	120 mm

Electrical data

Consumption	31,1 W
Performance	98.97 lm/W
Ripple	3
Power Factor	0.96
Nominal Voltage	34.6 V

Luminaire Output

Beam Type	M
Beam	36º
Luminous Flux	3078 lm
CRI CCT	930
Glare Indicator Ugr Longwise Optics	20
Glare Indicator Ugr Parallel Optics	20

Light distribution

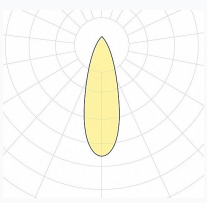

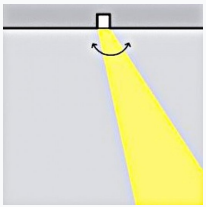

Safety characteristics

IK	07
IP	20
Protection Class	Class III

Temperature Operating Conditions

Lifetime	>60.000h L80B10@35°C
Operating Ambient Temperature	-10...+45°C
Operating Humidity Level	5...95%