ANULUS 2F LED



Technical drawings

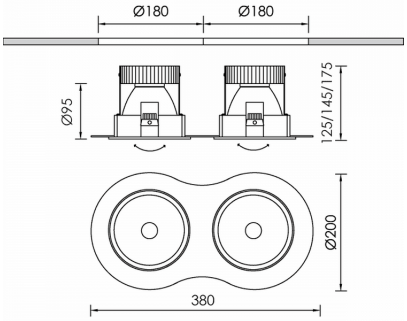

Product Details

CE LM80 LM79 TM21 REACH Source Type COB LED

General Information

Housing	Metal
Product code	DL4966CL009DA
Product family	ANULUS
Diffuser	Safety Glass Clear
Control Gear	Remote Electronic Driver
Options for Dimming Control	DALI2
Width	200 mm
Length	380 mm
Height	175 mm

Electrical data

Consumption	93,2 W
Performance	107.96 lm/W
Ripple	3
Power Factor	0.96
Nominal Voltage	2x34.6 V

Luminaire Output

Beam Type	XW
Beam	60º
Luminous Flux	10062 lm
CRI CCT	940
Glare Indicator Ugr Longwise Optics	20
Glare Indicator Ugr Parallel Optics	19

Light distribution

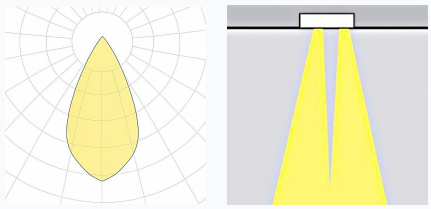

Safety characteristics

IK	05
IP	20
Protection Class	Class III

Temperature Operating Conditions

Lifetime	>60.000h L80B10@35°C
Operating Ambient Temperature	-10...+45°C
Operating Humidity Level	5...95%