HEADOFFICE: Showroom 13 Sofokli Venizelou Ave., Likovrisi, P.O. Box 14123, Athens, Greece Tel: (+30) 210 2851 304 I www.bright.gr I info@bright.gr

PENDO 2R CEILING LED



Technical drawings

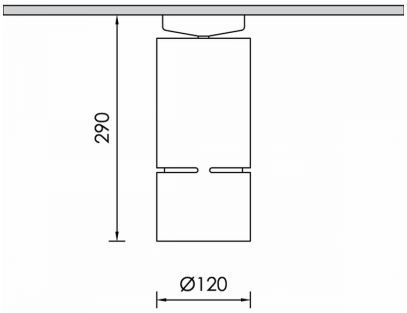

Product Details

CE LM80 LM79 TM21 REACH Source Type COB LED

General Information

Housing	Aluminium
Product code	CM0368CL002ON
Product family	PENDO
Diffuser	Clear Polycarbonate
Control Gear	Built-in ECG
Options for Dimming Control	On-Off
Height	290 mm
Diameter	120 mm

Electrical data

Consumption	26,8 W
Performance	102.28 lm/W
Ripple	3
Power Factor	0.96
Nominal Voltage	230 V

Luminaire Output

Beam Type	NM
Beam	24º
Luminous Flux	2741 lm
CRI CCT	930
Glare Indicator Ugr Longwise Optics	17
Glare Indicator Ugr Parallel Optics	17

Light distribution

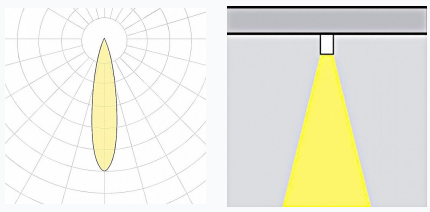

Safety characteristics

IK	07
IP	20
Protection Class	Class I

Temperature Operating Conditions

Lifetime	>60.000h L80B10@35°C
Operating Ambient Temperature	-10...+45°C
Operating Humidity Level	5...95%