# ULNA 1F



## Technical drawings

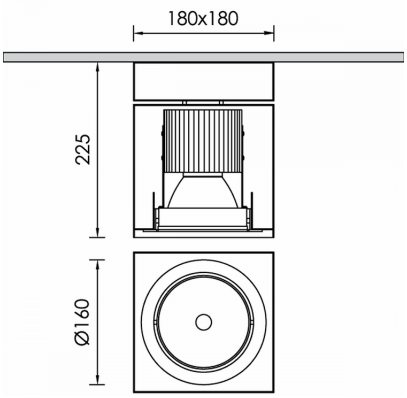


## Product Details

CE LM80 LM79 TM21 REACH Source Type COB LED

### General Information

| | |
|---|---|
| Housing | Metal |
| Product code | CM0467CL002DAC |
| Product family | ULNA |
| Diffuser | Safety Glass Clear |
| Control Gear | Built-in ECG |
| Options for Dimming Control | DALI2 |
| Options for Wireless Dimming | Casambi |
| Width | 180 mm |
| Length | 180 mm |
| Height | 225 mm |

### Electrical data

| | |
|---|---|
| Consumption | 12,8 W |
| Performance | 119.69 lm/W |
| Ripple | 3 |
| Power Factor | 0.96 |
| Nominal Voltage | 230 V |

### Luminaire Output

| | |
|---|---|
| Beam Type | M |
| Beam | 36º |
| Luminous Flux | 1532 lm |
| CRI CCT | 940 |

### Light distribution

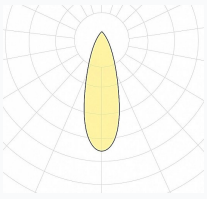

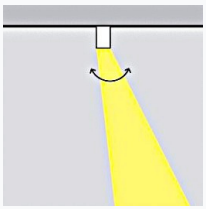

### Safety characteristics

| | |
|---|---|
| IK | 07 |
| IP | 20 |
| Protection Class | Class I |

### Temperature Operating Conditions

| | |
|---|---|
| Lifetime | >60.000h L80B10@35°C |
| Operating Ambient Temperature | -10...+45°C |
| Operating Humidity Level | 5...95% |