HEADOFFICE: Showroom 13 Sofokli Venizelou Ave., Likovrisi, P.O. Box 14123, Athens, Greece Tel: (+30) 210 2851 304 I www.bright.gr I info@bright.gr

ULNA 2F



Technical drawings

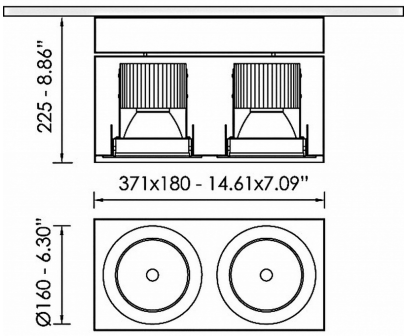

Product Details

CE LM80 LM79 TM21 REACH Source Type COB LED

General Information

Housing	Metal
Product code	CM0535CL002DA
Product family	ULNA
Diffuser	Safety Glass Clear
Control Gear	Built-in ECG
Options for Dimming Control	DALI2
Width	180 mm
Length	371 mm
Height	225 mm

Electrical data

Consumption	80,8 W
Performance	110.99 lm/W
Ripple	3
Power Factor	0.96
Nominal Voltage	230 V

Luminaire Output

Beam Type	XW
Beam	60º
Luminous Flux	8968 lm
CRI CCT	940

Light distribution

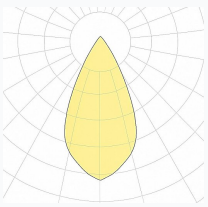

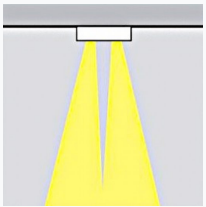

Safety characteristics

IK	07
IP	20
Protection Class	Class I

Temperature Operating Conditions

Lifetime	>60.000h L80B10@35°C
Operating Ambient Temperature	-10...+45°C
Operating Humidity Level	5...95%