XTS

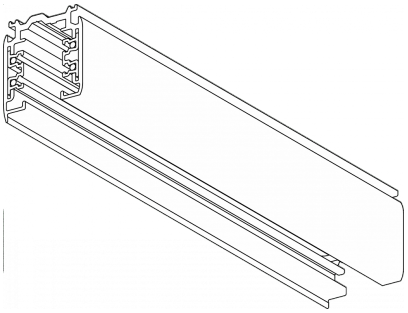

Technical drawings

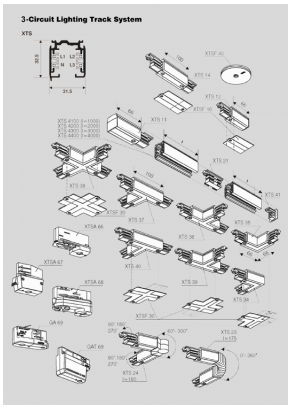

Product Details

General Information

Housing	Aluminium
Product code	TRK0010CL001
Product family	Three-circuit Track Systems — Tracks
Diffuser	—
Control Gear	—
Width	31.5 mm
Length	2000 mm
Height	32.5 mm

Electrical data

Nominal Voltage	400 V

Luminaire Output

Light distribution

Safety characteristics

IP	20

Temperature Operating Conditions