# XTS

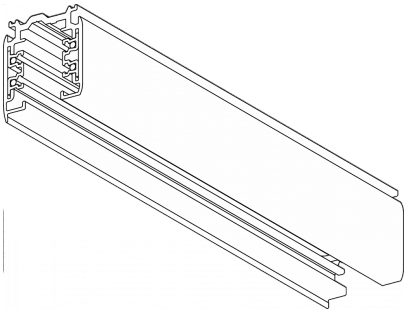

## Technical drawings

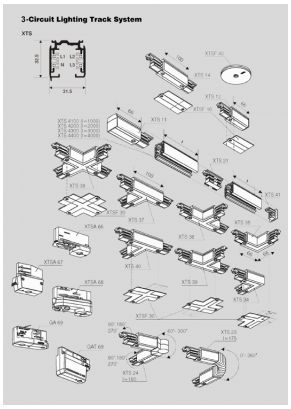


## Product Details

### General Information

| | |
|---|---|
| Housing | Aluminium |
| Product code | TRK0010CL002 |
| Product family | Three-circuit Track Systems — Tracks |
| Diffuser | — |
| Control Gear | — |
| Width | 31.5 mm |
| Length | 2000 mm |
| Height | 32.5 mm |

### Electrical data

| | |
|---|---|
| Nominal Voltage | 400 V |

### Luminaire Output

### Light distribution

### Safety characteristics

| | |
|---|---|
| IP | 20 |

### Temperature Operating Conditions