XTS 34

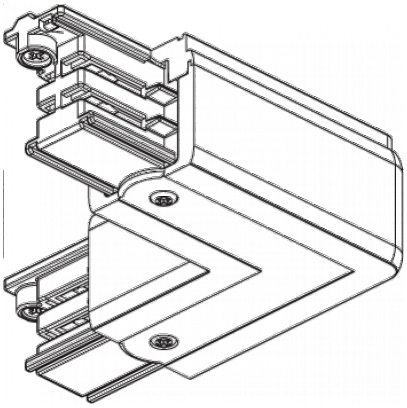

Product Details

General Information

Housing	—
Product code	TAC0067CL003
Product family	Three-circuit Track Systems — Accessories
Diffuser	—
Control Gear	—

Electrical data

Luminaire Output

Light distribution

Safety characteristics

Temperature Operating Conditions