# SP 4I

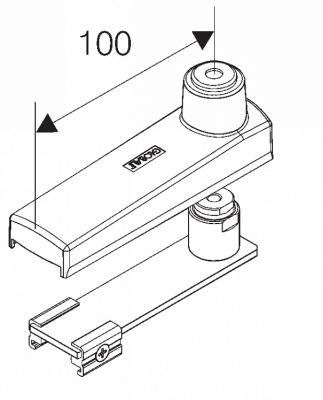


## Product Details

### General Information

| | |
|---|---|
| Housing | — |
| Product code | TAC0103 |
| Product family | Three-circuit Track Systems — Accessories |
| Diffuser | — |
| Control Gear | — |

### Electrical data

### Luminaire Output

### Light distribution

### Safety characteristics

### Temperature Operating Conditions