ANULUS SQUARE 1F LED



Technical drawings

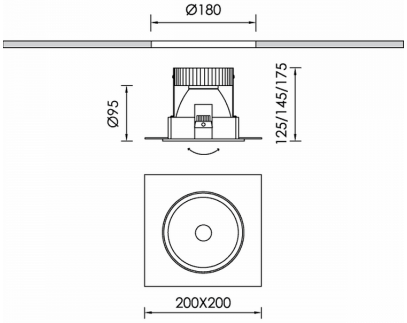

Product Details

CE LM80 LM79 TM21 REACH Source Type COB LED

General Information

Housing	Metal
Product code	DL6343CL001DA
Product family	ANULUS
Diffuser	Safety Glass Clear
Control Gear	Remote Electronic Driver
Options for Dimming Control	DALI2
Width	200 mm
Length	200 mm
Height	175 mm

Electrical data

Consumption	46,6 W
Performance	105.49 lm/W
Ripple	3
Power Factor	0.96
Nominal Voltage	34.6 V

Luminaire Output

Beam Type	M
Beam	36º
Luminous Flux	4916 lm
CRI CCT	935

Light distribution

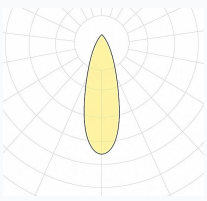

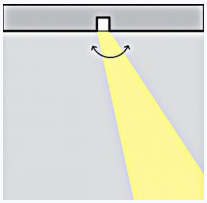

Safety characteristics

IK	05
IP	20
Protection Class	Class III

Temperature Operating Conditions

Lifetime	>60.000h L80B10@35°C
Operating Ambient Temperature	-10...+45°C
Operating Humidity Level	5...95%