# CERAM 3S 2F LED



## Technical drawings

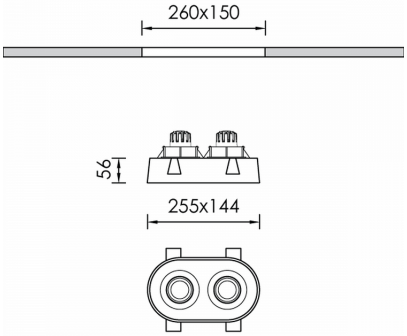


## Product Details

CE LM80 LM79 TM21 REACH Source Type H.P. LED

### General Information

| | |
|---|---|
| Housing | Plaster / Aluminium |
| Product code | DL6470CL001 |
| Product family | CERAM |
| Width | 144 mm |
| Length | 255 mm |
| Height | 56 mm |

### Electrical data

| | |
|---|---|
| Consumption | 6.6 W |
| Performance | 101.21 lm/W |
| Ripple | 3 |
| Power Factor | 0.96 |

### Luminaire Output

| | |
|---|---|
| Beam Type | M |
| Beam | 25º |
| Luminous Flux | 668 lm |
| CRI CCT | 935 |

### Light distribution

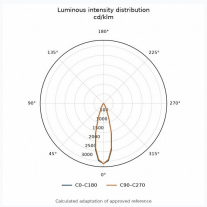


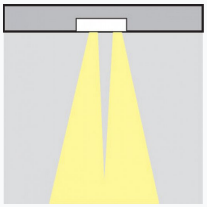

### Safety characteristics

| | |
|---|---|
| IK | 02 |
| IP | 20 |
| Protection Class | Class III |

### Temperature Operating Conditions

| | |
|---|---|
| Lifetime | >50.000h Module 3x H.P.LED CRI80 Ripple <3% |