CERAM 3S 2F LED



Technical drawings

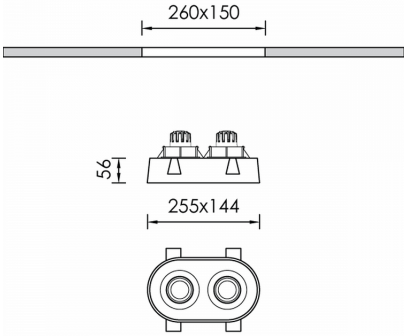

Product Details

CE LM80 LM79 TM21 REACH Source Type H.P. LED

General Information

Housing	Γύψος, Αλουμίνιο
Product code	DL6472CL001
Product family	CERAM
Width	144 mm
Length	255 mm
Height	56 mm

Electrical data

Consumption	6.6 W
Performance	101.21 lm/W
Ripple	3
Power Factor	0.96

Luminaire Output

Beam Type	W
Beam	45º
Luminous Flux	668 lm
CRI CCT	935

Light distribution

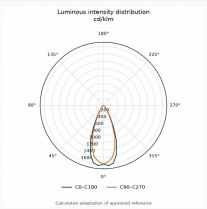

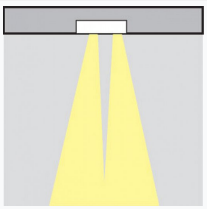

Safety characteristics

IK	02
IP	20
Protection Class	Class III

Temperature Operating Conditions

Lifetime	>50.000h Module 3x H.P.LED CRI80 Ripple <3%