HEADOFFICE: Showroom 13 Sofokli Venizelou Ave., Likovrisi, P.O. Box 14123, Athens, Greece Tel: (+30) 210 2851 304 I www.bright.gr I info@bright.gr

FLUXUS M-T LED



Technical drawings

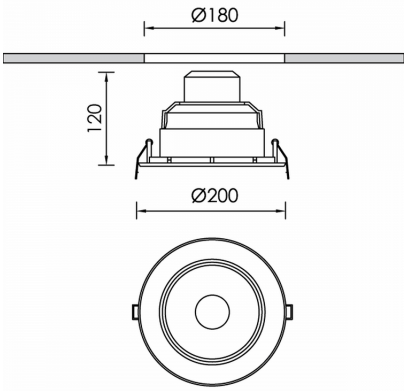

Product Details

CE LM80 LM79 TM21 REACH Source Type COB LED

General Information

Housing	Aluminium
Product code	DL6613CL003DA
Product family	FLUXUS
Control Gear	Built-in ECG
Options for Dimming Control	DALI2
Height	195 mm
Diameter	231 mm

Electrical data

Consumption	22,7 W
Performance	87.09 lm/W
Ripple	3
Power Factor	0.96
Nominal Voltage	230 V

Luminaire Output

Beam Type	XW
Beam	86º
Luminous Flux	1977 lm
CRI CCT	935

Light distribution

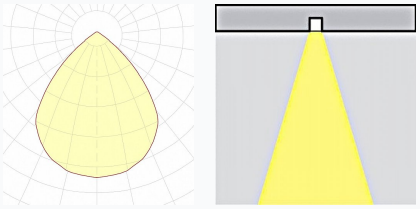

Safety characteristics

IK	04
IP	20
Protection Class	Class II

Temperature Operating Conditions

Lifetime	50.000h L70B50@25°C
Operating Ambient Temperature	-10...+45°C
Operating Humidity Level	5...95%