HONOR L N WHITE OPTIC LED



Technical drawings

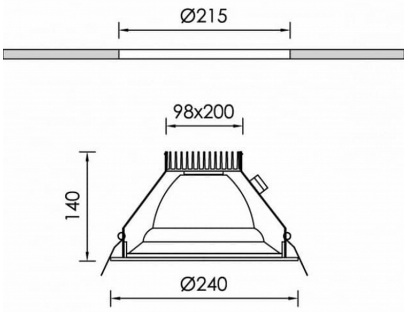

Product Details

CE LM80 LM79 TM21 REACH ENEC

Source Type COB LED

General Information

Housing	Aluminium
Product code	DL6622CL002ON
Product family	HONOR
Diffuser	Prismatic glass
Control Gear	Remote Electronic Driver
Options for Dimming Control	On-Off
Height	140 mm
Diameter	240 mm

Electrical data

Consumption	34,2 W
Performance	91.08 lm/W
Ripple	3
Power Factor	0.96
Nominal Voltage	34.6 V

Luminaire Output

Beam Type	XW
Beam	75º
Luminous Flux	3115 lm
CRI CCT	935

Light distribution

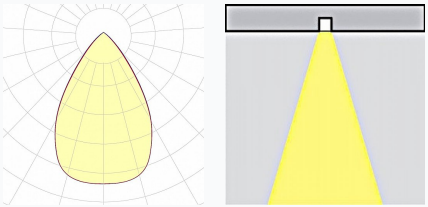

Safety characteristics

IK	05
IP	20
Protection Class	Class III

Temperature Operating Conditions

Lifetime	>60.000h L80B10@35°C
Operating Ambient Temperature	-10…+45°C
Operating Humidity Level	5…95%