MAX CARBO LED



Technical drawings

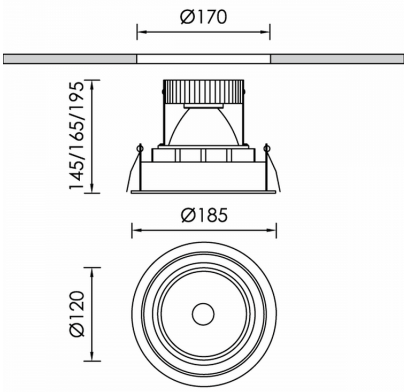

Product Details

CE LM80 LM79 TM21 REACH Source Type COB LED

General Information

Housing	Aluminium
Product code	DL6817CL002DA
Product family	MAX CARBO
Control Gear	Remote Electronic Driver
Options for Dimming Control	DALI2
Height	195 mm
Diameter	185 mm

Electrical data

Consumption	40,4 W
Performance	108.47 lm/W
Ripple	3
Power Factor	0.96
Nominal Voltage	34.6 V

Luminaire Output

Beam Type	W
Beam	40º
Luminous Flux	4382 lm
CRI CCT	935
Glare Indicator Ugr Longwise Optics	21
Glare Indicator Ugr Parallel Optics	21

Light distribution

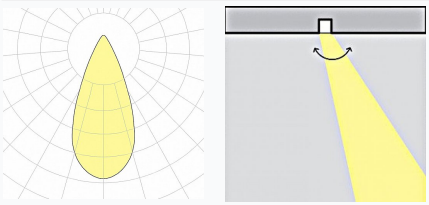

Safety characteristics

IK	05
IP	20
Protection Class	Class III

Temperature Operating Conditions

Lifetime	>60.000h L80B10@35°C
Operating Ambient Temperature	-10...+45°C
Operating Humidity Level	5...95%